LiGHT SKY



NEW

AURORA TIDE

OUTDOOR LED MOVING BSW 3 IN 1

IP66 · RoHS · RDM · DMX 512 · Art-net · S-ACN · CRI Ra≥90

FEATURES

- Aurora Tide is an LED beam, spot, and wash 3-in-1 moving head fixture.
- Featuring a high-precision optical system and a 115 mm large-diameter front lens, it delivers long-throw projection capability and high illuminance output.
- The fixture is equipped with one rotating gobo wheel and one fixed gobo wheel, providing an illuminance of up to 18,792 lx @ 10 m.
- With a compact and lightweight design, Aurora Tide is suitable for theaters, TV studios, stage performances, and high-end entertainment venues.

Unit: mm

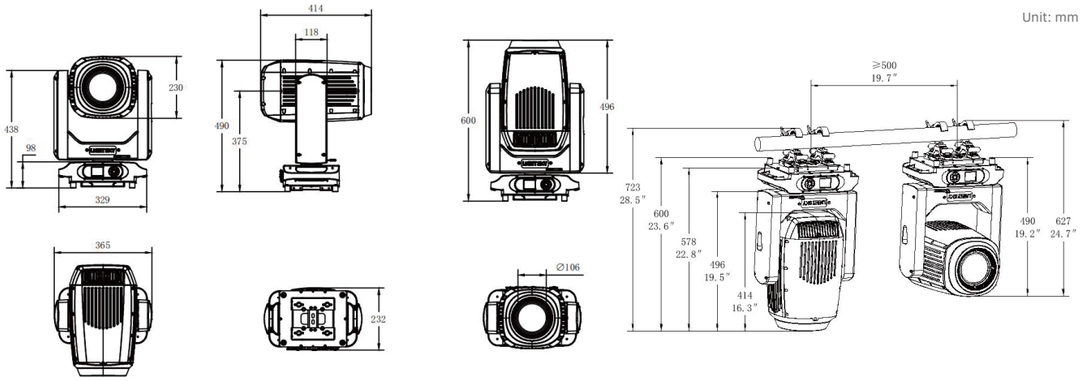

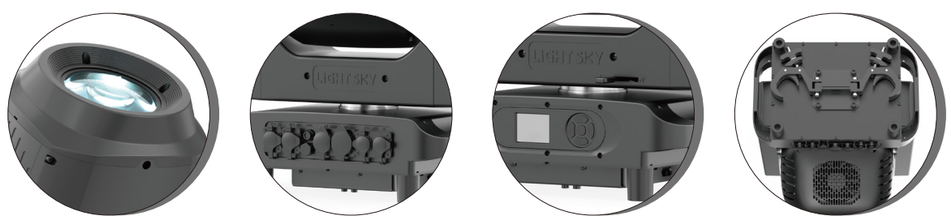

Optics

Light Source:350W white LED module
Zoom Range: 4.1°-42° (Standard Mode), 2.1°-20° (Beam Mode)
Front Lens : ϕ 115mm
Colour Temperature Output: 7000K±250K
Color Rendering Index (CRI): Ra=71 (with filter Ra≥90)
Illuminance: 18, 792 lx@10m
Total Lumen Output: 15, 000lm
Light Source Theory Life Span: 50,000 h

Color

CMY infinite color mixing
CTO color temperature linear adjustment (2500K~7000K)
Multicolor effect gobos
8 colors + blank + CRI, capable of bi-directional rainbow effect,
bi-color step gradient (linear movement), color wheel bi-directional rotation,
and random color mode

Gobos

Rotating gobo wheel:8 gobos + blank, Ø17.0 mm (outer), Ø13.0 mm (Inner), replaceable, capable of rotation,flowing, and shaking effects
Fixed Gobo Wheel: 8 gobos + blank, capable of flowing and shaking effects
Effect wheel: bidirectional flow effects with linear speed adjustment

Effects

Prism: 4-facet prism + 6-liner prism, bi-directional rotation
Frost effects: light frost + heavy frost, independently adjustable
Electronic dimming: 0-100% linear dimming, uniform beam
Strobe: 1-25 times/sec
LED refresh rate：1000Hz ~ 25KHz

Control and Programming

Control Channels：30CH, 39CH, 42CH
Protocol: DMX512, RDM, Art- Net, sACN
Data Connection: 3-pin or 5-pin IN/OUT, RJ45(Art- Net) IN/OUT
Display: LCD screen

Software

Software upgrade via DMX signal
Intelligent temperature control for LED lifespan
Silent fan with three modes: High-brightness/Standard/Silent

Pan/Tilt Movement

Pan: 540°, 8-bit / 16-bit precision
Tilt: 270° , 8-bit / 16-bit precision
Automatic reset with error correction
Pan/Tilt Lock

Power and Electrical

Input Voltage Range: AC 100-240V 50/60Hz
Max Power Consumptionr: 524W
Power Factor: 0.96
Maximum Current of Fixture: 5.24A/100V； 2.38A/220V

Size and Weight

Product Dimensions: 365mm × 232mm × 600mm
Net Weight: 22.3kg
Carton Dimensions: 710mm × 450mm × 315mm
Gross Weight: 26.7kg

Other

IP Rate: IP66
Operating Environment: -10℃ ~ 45℃
Maximum Surface Temperature of Fixture: 65℃

Factory Configuration

Power Cable: 1 pc (Part No.: F0200030016)
Signal Cable: 1 pc (Part No.: C1400060031)
Safety Rope: 1 pc (Part No.:F0200010002)

Optional Accessories/Packaging

Flycase Part No.: B0101390001
Flycase Dimensions(2 in 1): 660mm × 500mm × 825mm
Flycase Gross Weight(2 in 1): 77.9kg

Color Wheel



Function Effect



Fixed Gobo Wheel

8 gobos + blank



Rotation Gobo Wheel



Illumination Diagram

Standard Mode

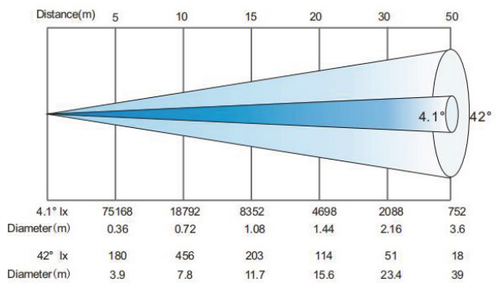

Beam Mode

